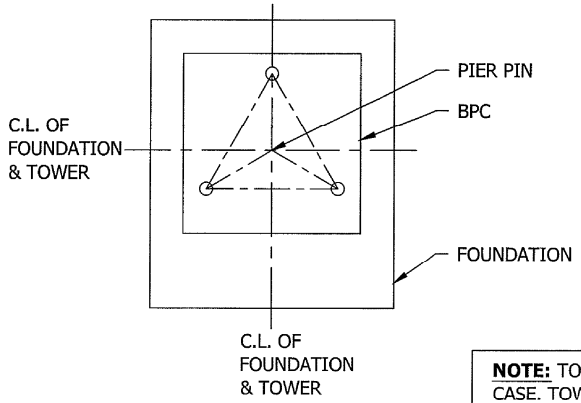

NOTE: TOWER IS NOT TO STAND UNGUYED IN ANY CASE. TOWER MUST BE TEMPORARILY OR PERMANENTLY GUYED WITH STEEL GUYS AT ALL TIMES.

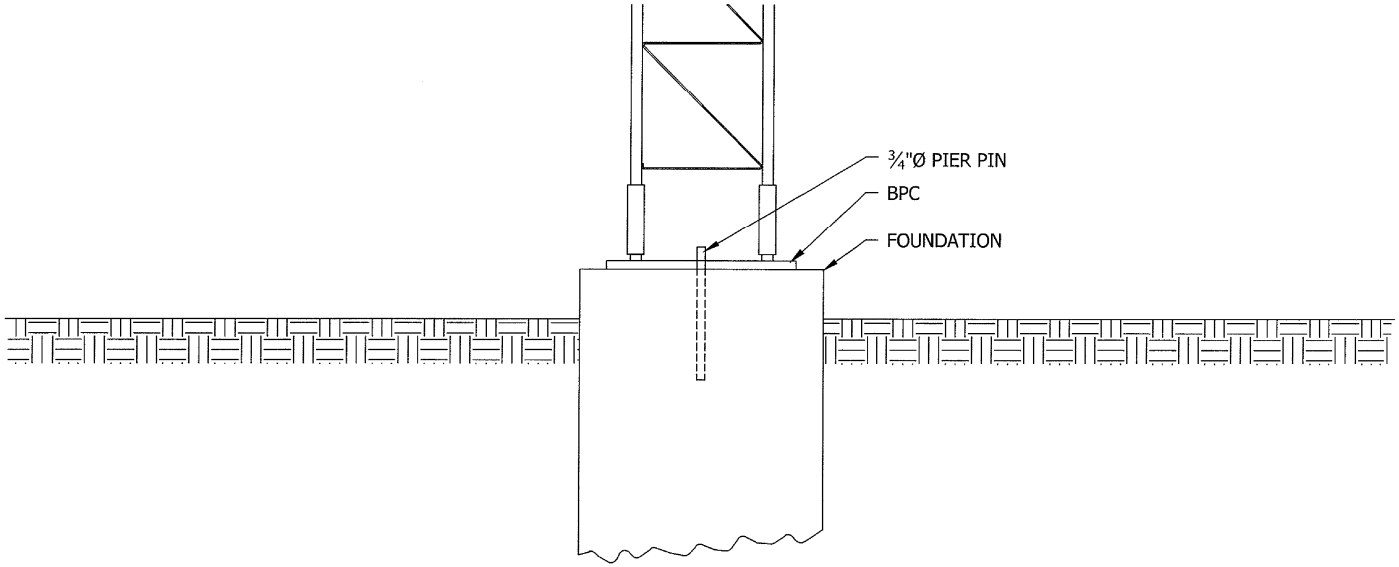

FILE NO.
Standard-SSV

REVISIONS

REV.	DESCRIPTION	DWN	CHK	APP
2	REDRAWN DATE: Mar/18/2005	CMH	KTL	HA

DWG REFERENCE

ROHN PRODUCTS
6718 WEST PLANK ROAD
PEORIA, IL 61604
TOLL FREE 800-727-ROHN

THIS DRAWING IS THE PROPERTY OF ROHN. IT IS NOT TO BE REPRODUCED, COPIED OR TRACED IN WHOLE OR IN PART WITHOUT OUR WRITTEN CONSENT.

DWG BPC ASSEMBLY DETAILS

DWN:	CHK'D:	DATE:
OH	GR	Jun/05/1968

ENG'R: TWS

DRAWING NO: B680606 REV: 2

Sep/17/2007 8:23:53 AM
Version\